SUPPLYING HIGH QUALITY LASERED PRODUCTS FOR OVER 20 YEARS

GOODMAN
STEEL SERVICES

CE 2273

bsi. ISO 9001 Quality Management RS 24788

ISO 14001 Environmental Management EMS 575043

STEEL for life HEADLINE SPONSOR

BARRETTSTEEL.COM | SALES@GOODSTEEL.CO.UK | 0118 956 1212

BARRETT STEEL TUBES

Barrett Steel Tubes has grown continuously to become one of the largest suppliers of processed steel tube products in the UK and Ireland.

As part of the Barrett Steel Group our extensive product range includes hollow section, nominal bore tube, stainless steels and ERW precision tube in squares, rectangles, rounds, ovals and more.

The laser processing area of our business was established in 1999 to produce laser cut parts from Tubes, Box Section and Open Sections.
A means of production recognised to save our customers time by making the design and fabrication of complex tubular structures a simple task.

Who We Are

- Established suppliers to a number of leading OEMs.
- Experienced in serving a wide range of specialist sectors.
- Proud to work with our customers to deliver optimum solutions for a diverse range of technically challenging and time-critical projects.

£60 MILLION TURNOVER
year ending Sept 19

90+ STAFF

3 SAWS

12 STATE OF THE ART **LASERS**

BARRETT STEEL GROUP

Barrett Steel Tubes is a division of the Barrett Steel Group who, for over 150 years, have strived to provide top quality customer service and develop long-term mutually beneficial partnerships, setting us apart from our competitors. As the UK's largest steel stockholder, we have significant buying power and provide our customers with excellent value.

Being part of the Barrett Steel Group means we can be a 'one stop shop' for all your project requirements with stock, processing and ancillary products all from one source.

- Structural Section and Mild Steel – beams, columns, angles, flats and channel.
- Dedicated Profiling centre with new 10Kw ByStar Fibre Laser, Oxy Gas, Plasma, Laser Cutting and Drilling on site.
- Engineering Bar – bright and black, carbon, alloys, oil and gas grades and forged bar.
- Safety and Access Products – handrailing, fabricated flooring, weld mesh, Defender, Armco.
- Glass Reinforced Plastic (GRP) products such as flooring, stair treads and fabricated structures.

BARRETT GENERAL STEELS

BARRETT STEEL TUBES

BARRETT ENGINEERING STEEL

£328 MILLION TURNOVER year ending Sept 19

25+ SITES LOCATED strategically across the UK

1000+ STAFF

160+ TRANSPORT FLEET

100 THOUSAND TONNES of steel stock

£50 MILLION+ INVESTED over the past 7 years

SUPPLY CHAIN MANAGEMENT

Barrett Steel Tubes is proud to work alongside customers offering tailored solutions to reduce costs whilst strengthening your supply chain.

- Dedicated Contract Manager.
- Experienced in understanding the requirements of OEMS and their tier one suppliers.
- Greater CAD capacity to allow for increase in new parts programming.
- Stock can be held and kits of parts created increasing processing efficiency, ready for call off as well as supplied on a consignment basis.
- Offer a Just in Time service to assist with cash flow.
- In-house expertise ensures parts are created in the most efficient manner.

The Importance of Quality

- Production Part Approval Process (PPAP).
- Initial Sample Inspection Report (ISIR).
- Part Submission Warrant (PSW).

Our experienced Quality Team are trained to be able to produce ISIR, PPAP and PSW documentation on request. This gives you the confidence that your parts are manufactured to your requirements.

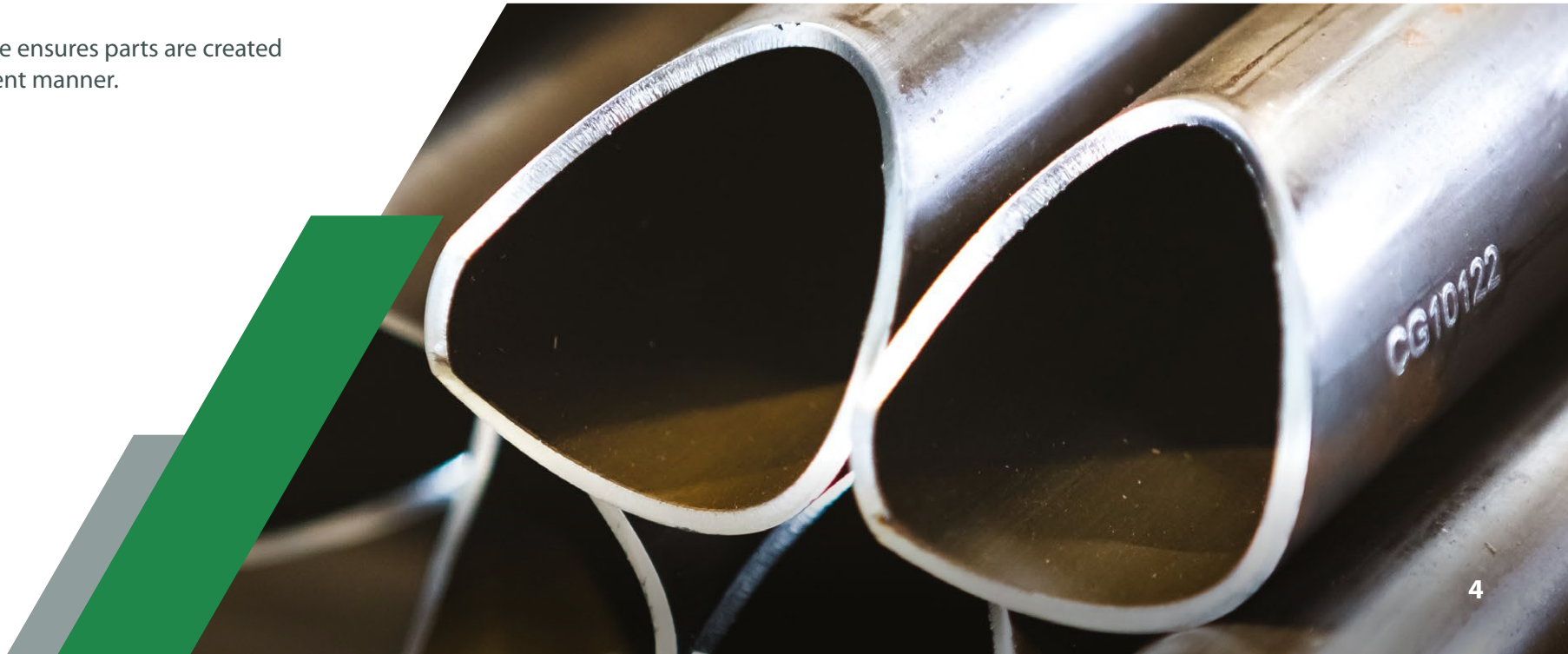

LASER CUTTING RANGE

Square Sections

From **12.7mm x 12.7mm x 0.9mm**
To **400mm x 400mm x 16mm**

Circular Sections

From **12.7mm x 0.9mm**
To **508mm x 16mm**

Rectangular and Oval Sections

From **25.4mm x 12.7mm x 1.2mm**
To **500mm x 300mm x 16mm**

Channel Sections

From **52mm x 35mm**
To **300mm x 90mm**

Angle Sections

Equal
From **25mm x 25mm x 3mm**
To **200mm x 200mm x 16mm**

Unequal
From **40mm x 20mm x 4mm**
To **200mm x 150mm x 15mm**

Finished lengths up to 15 metres.

3D / 5 Axis Laser Cutting

3D / 5 Axis laser cutting can be utilised to create time saving weld preps and other geometrics. This will aid the fabrication of tubes, hollow sections, angles, channels and other shapes (on application, as well as other metals).

Jumbo Tube Lasers

The LT20 and LT14 Jumbo CNC Tube Lasers are the UK's two largest machines in terms of the sections they can process and the finished lengths they can produce.

The lasers can offer time saving solutions on the current range of tubes and hollow sections produced by our approved suppliers and mills.

HOLLOW SECTION CUTS

These cuts are examples of and not limited to our abilities, please contact the team with any other requirements.

Bird Mouth Circular

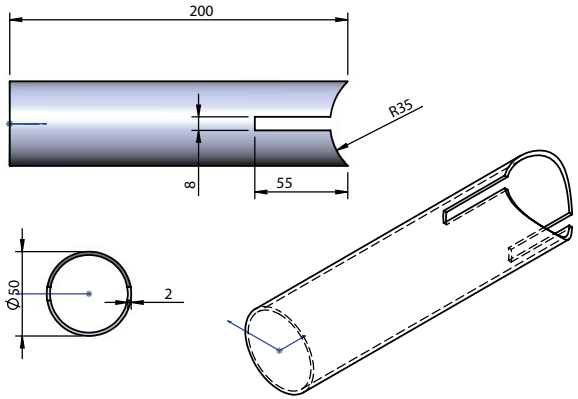

Bird Mouth Square

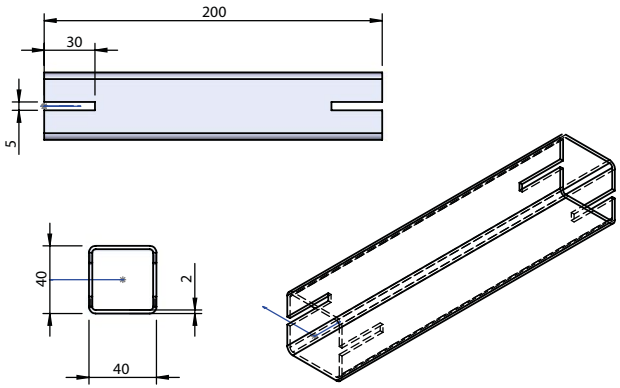

Resting Cut

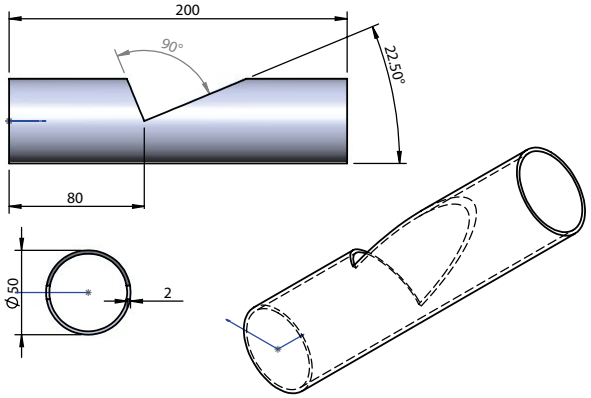

Scalloped Bird Mouth

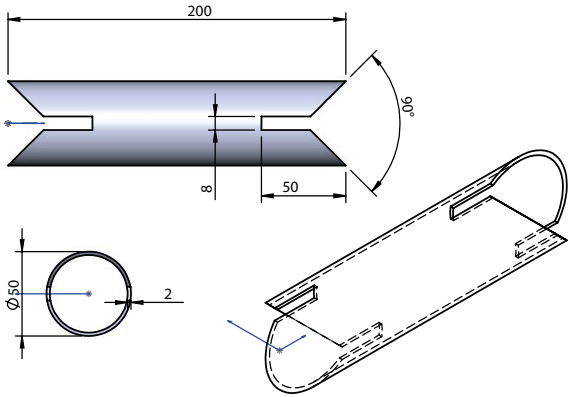

Slot in Fatigue

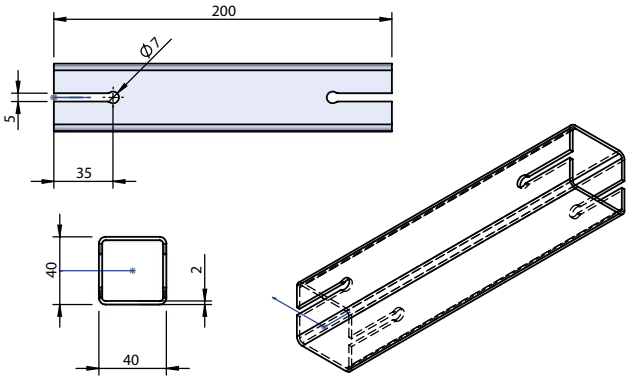

Saddle Cut

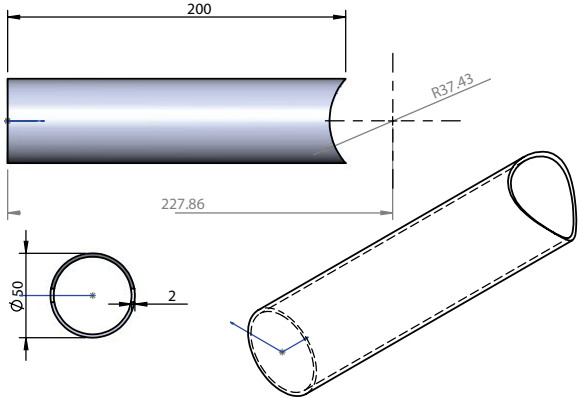

Cod Mouth

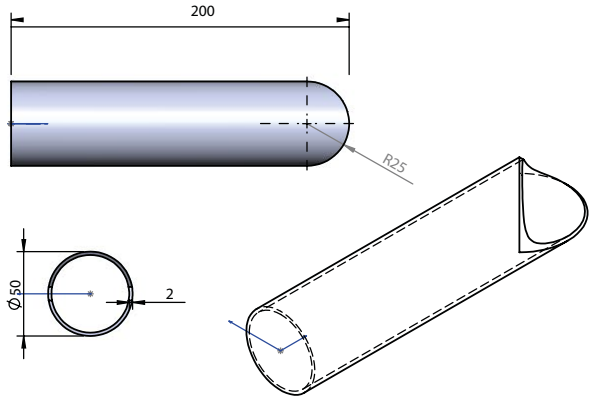

Weld Closure

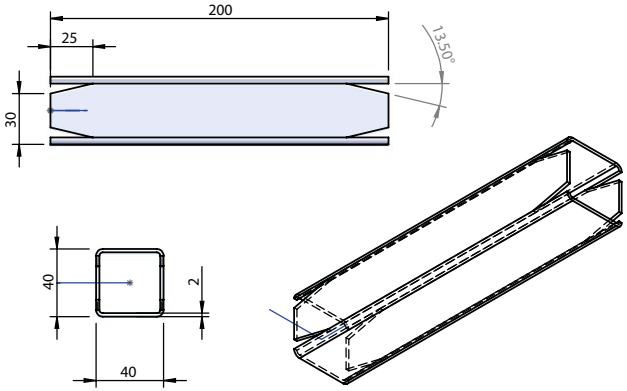

OTHER PROCESSING OPTIONS

Tapping / Threading

We are able to offer a tapping service to laser and drilled parts ranging from M2 (2mm) to M12 (12mm). Greater sizes are available, please contact the team to discuss your requirements.

Saw / Mitre Cutting

Our cutting facilities include semi-automatic band saws and carbide saw cutting.

We can provide a bevelled, bundle, repitition, square and mitre cutting service which enables Barrett Steel Tubes to offer fast and accurate cutting for all your requirements.

CNC Plasma / Gas Tube Cutting

For thick wall and large diameter tubes.

The latest addition to our processing capabilities is the modern German engineered CNC pipe/tube plasma and gas profiler (RB1500). The plasma offers innovative technology and ground-breaking software for processing pipe up to 1500mm diameter.

- Perfect for mitre cuts, saddle cuts and offshore cuts.
- The contact line of the macro can be selected without any limits along the whole cutting contour.
- The contact point can be placed in the centre of the cutting seam (at 50% position between the outside and inside pipe diameter).
- The pipe can be welded from both sides with the same weld bevel.

Flowdrilling

Flowdrill also known as friction drilling, flow forming or thermal drilling process uses high rotational speed and high pressure to make holes in the desired material. Material is not lost using a Flowdrill process but forms a sleeve around the hole. The process is beneficial when there is a requirement for a thread in thin material without the use of thread inserts.

Bending

Two mandrel tube bending machines can bend material up to 38mm diameter in both Mild and Stainless Steel. Our machine (Elect 150) enables us to offer both fixed and variable radius bends on tubes up to 150mm dia. subject to tooling.

There are also four ring rollers on site that offer variable radius bending on sections up to 120mm x 120mm and the equivalent in rectangles and circles.

Alongside these machines a Euromac Digibend machine covers a variety of bending applications in both Hollow Sections and General Steel products.

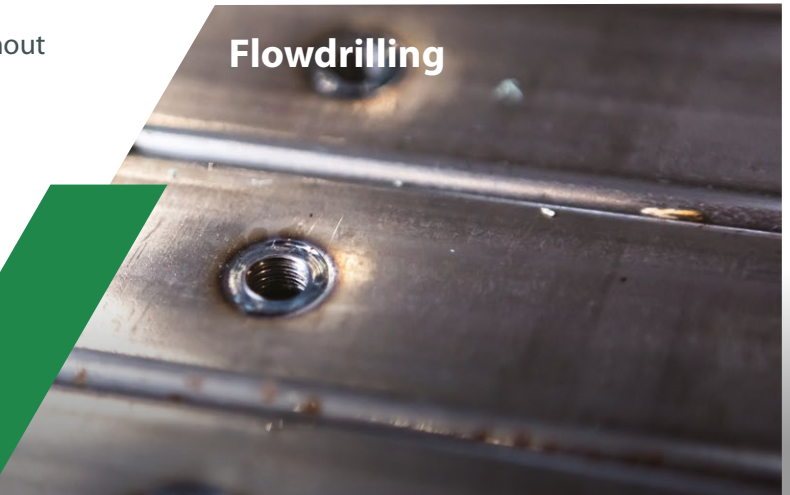

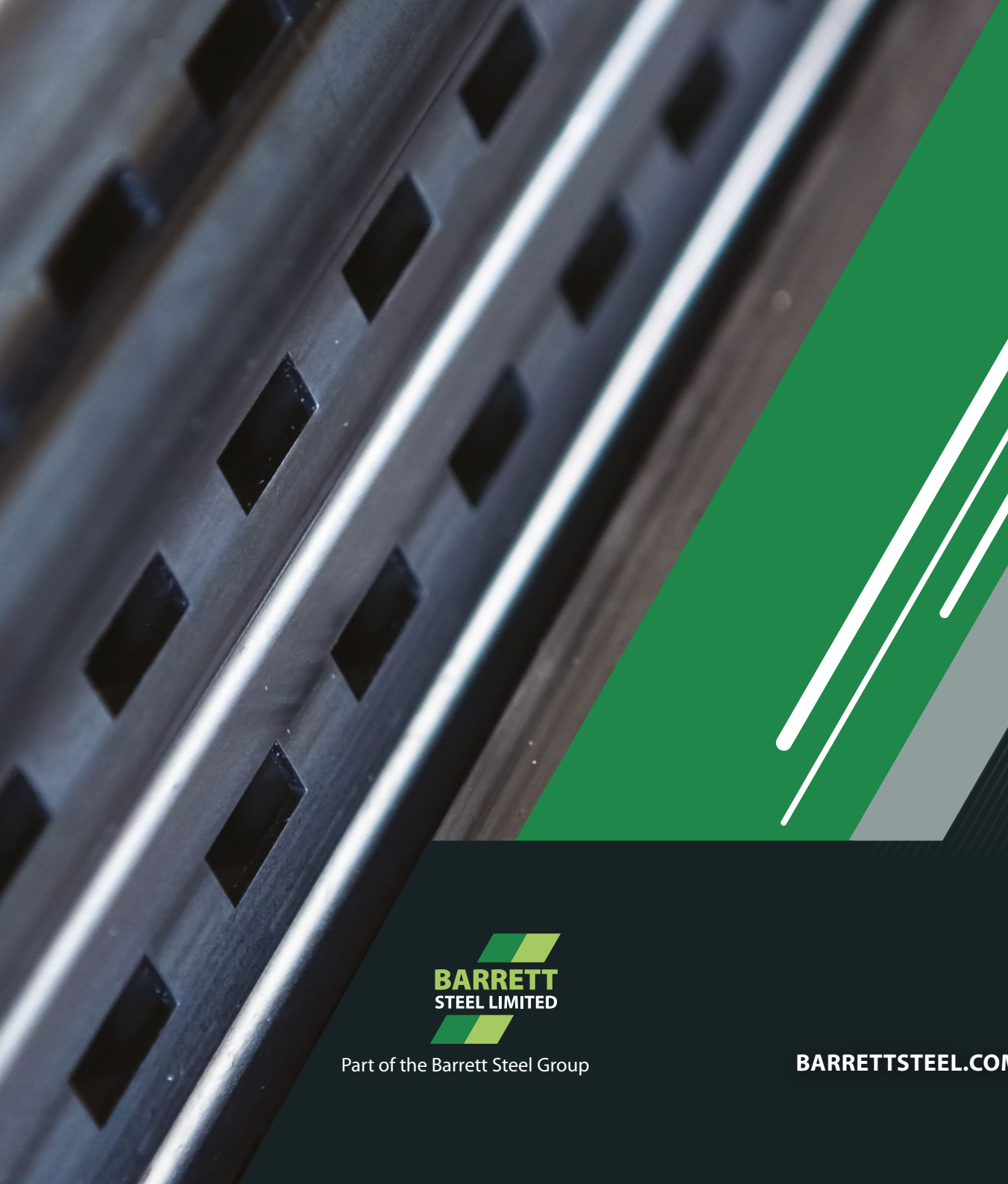

GOODMAN
STEEL SERVICES

BARRETT
STEEL LIMITED

Part of the Barrett Steel Group

BARRETTSTEEL.COM | SALES@GOODSTEEL.CO.UK | 0118 956 1212